SEAT BASE HOLE PATTERN

J700 & J800

Bottom Mounting Pattern

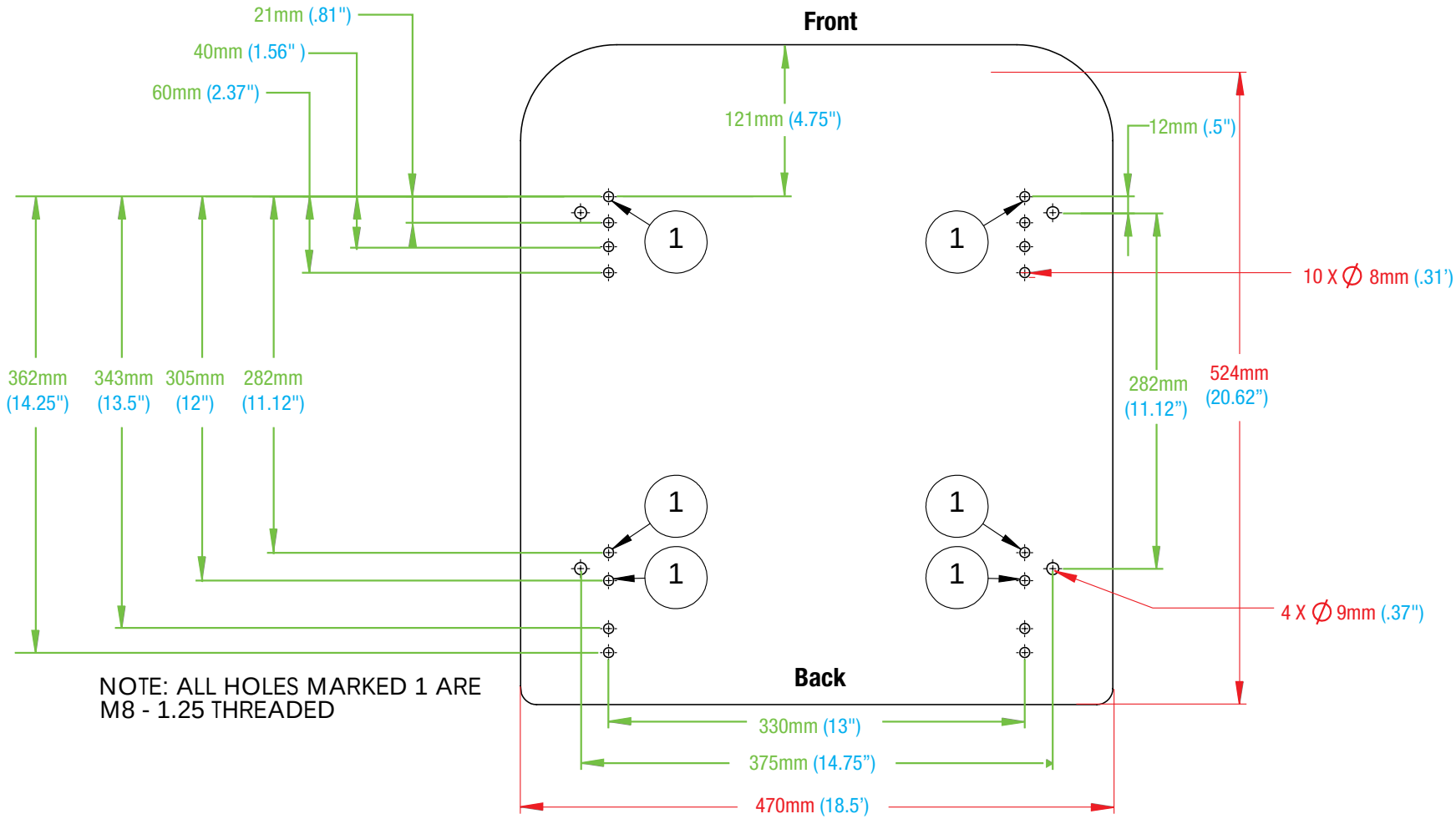

NOTE: ALL HOLES MARKED 1 ARE M8 - 1.25 THREADED

ULTRA SEAT CORPORATION

* Mounting Pattern Dimensions
* Measurements in Inches
* Overall Dimensions

PHONE: 1-800-667-7328 • **FAX:** 1-888-667-7328

ULTRASEAT.COM